What’s in the mix?

Combining novel IVD technologies, manufacturing methods and partnerships for success.

BLUECURVE

Introduction

- What does it take to create a successful POCT product?
- Some key success factors in the mix.
- Case study highlights.

BLUECURVE

Seven Success factors

- Novel Technology
- Understand & answer a real-world problem
- Innovative manufacture
- World-view sourcing
- Pragmatism
- Creative commercial partnerships
- Resources – not just dollars

BLUECURVE

1) Novel Technology

- Most ‘new’ POCT’s based on novel technology
- IS THIS ENOUGH?
- Market pull meets technology push
- Commercially realistic manufacture + distribution

BLUECURVE

Technology innovation example

- Universal Biosensors (UBI)
  - OneTouch Verio BGM (LifeScan – J&J)

- 2010 – launched as a new standard of accuracy in the consumer Blood Glucose monitoring

BLUECURVE

UBI Key Innovation

- Opposing cell questioned conventional wisdom

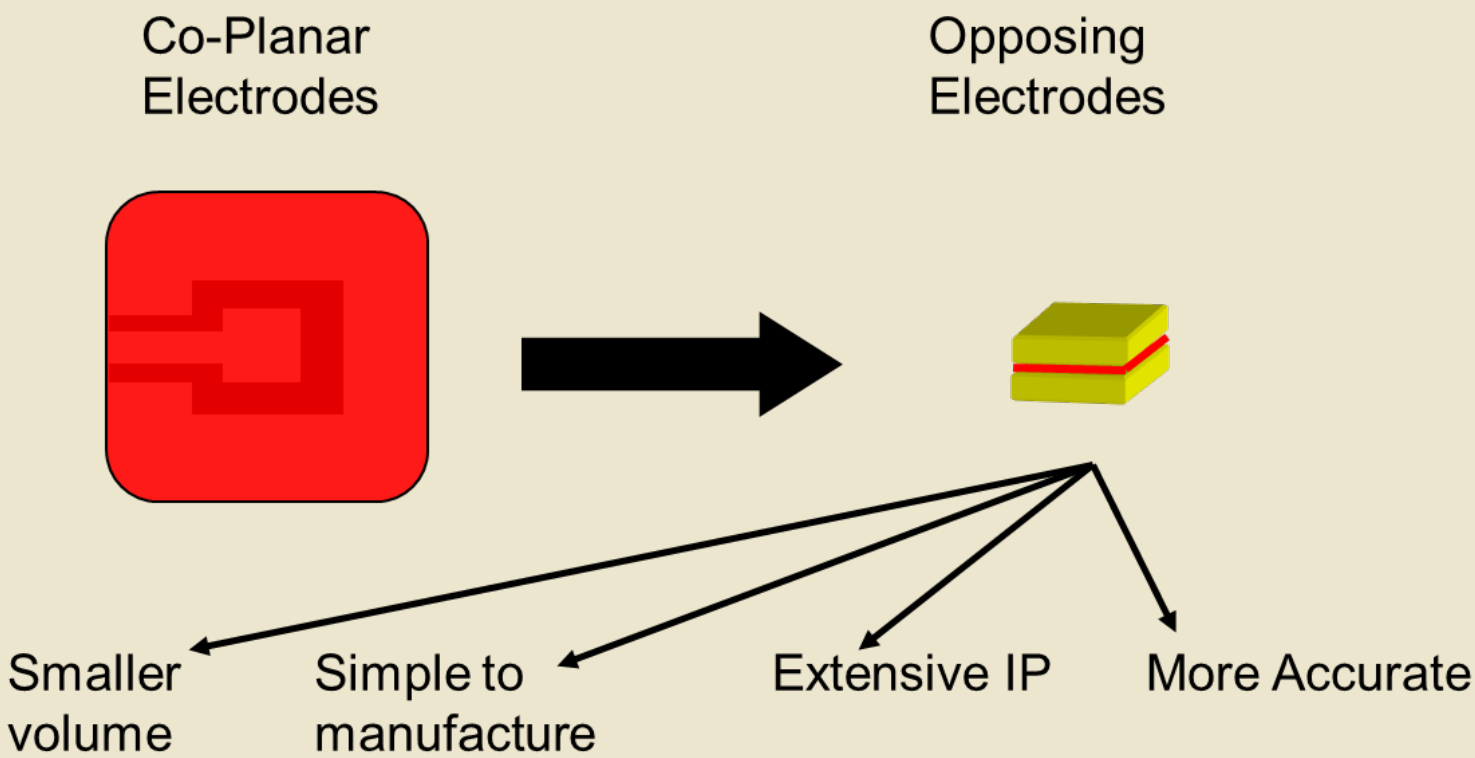

BLUECURVE

UBI Key Innovation

- Improved design
  - More diagnostic information – leads to…
  - Increased accuracy – real-world problem
  - FAD enzyme – improved interferences
  - Low cost manufacture – attractive to partner

BLUECURVE

2) Answer a real-world problem

- What problem are you solving?
- Do you know what your customer needs?

<u>OR</u>

- Do you just <u>*think*</u> you know
- Build relationships to bridge the gap

BLUECURVE

3) Innovative Manufacture

- Can you make it repeatedly?
- Can you make it reliably?
- Can you make it profitably?
- Should you make it at all – outsource?

BLUECURVE

UBI strip manufacturing

- Innovative web based process
- Process designed hand-in-hand with product
- Design gives control of product accuracy

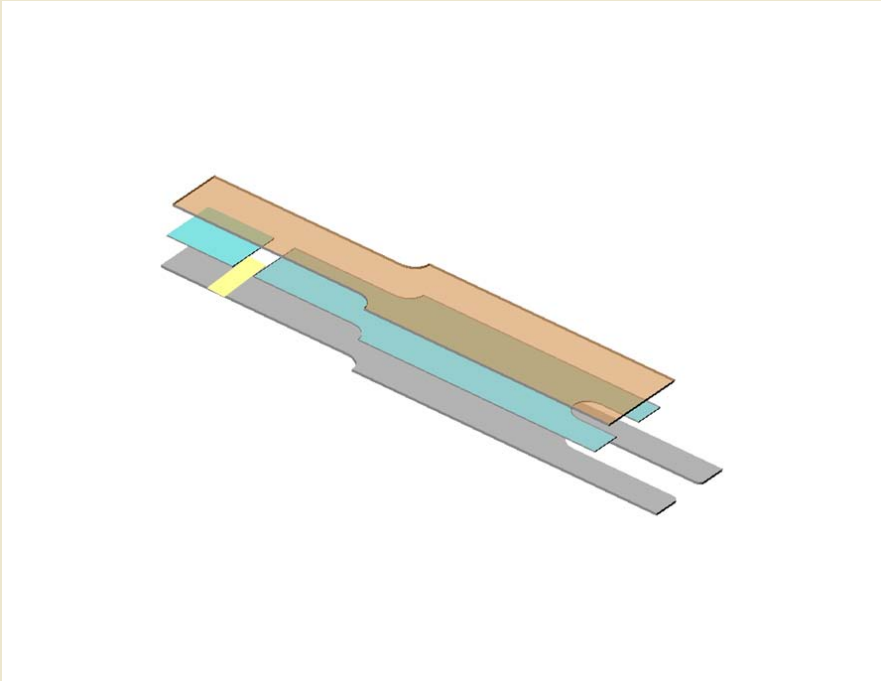

BLUECURVE

UBI strip manufacturing

- Automated Reel-Reel process – efficient
- Process gives quality and maximises yield
- Relatively low labour input makes Australian manufacture possible
- Low unit cost

BLUECURVE

UBI strip manufacturing

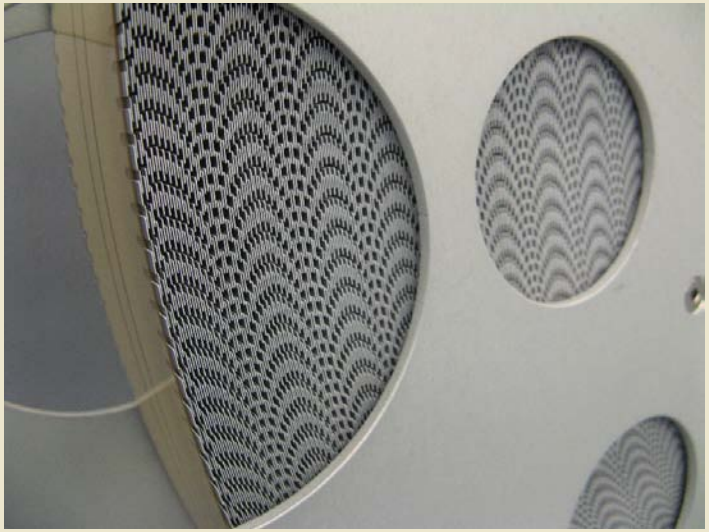

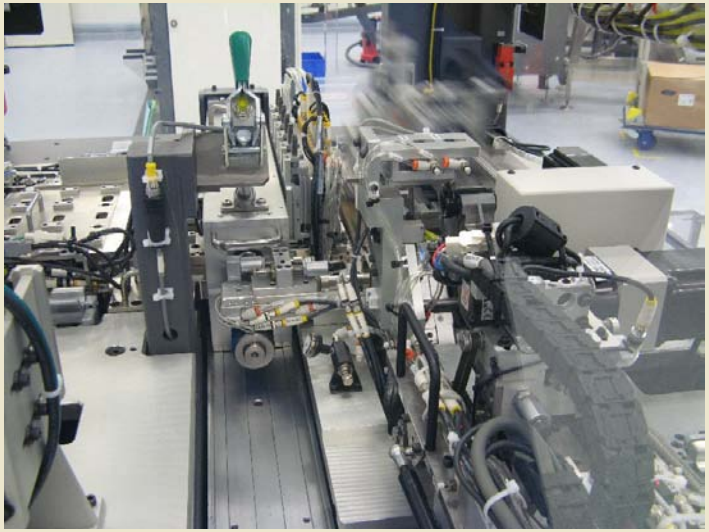

BLUECURVE

UBI meter manufacturing

- Not UBI core IP or business – outsource
- Found reputable Contract Manufacturer
- Invested time and effort to make it work well
- Build relationships over multiple products

BLUECURVE

4) World view sourcing

- Key components may not be in your back yard
- Inputs can come from anywhere – go for quality + price + supply

<u>BUT</u>

- Check your key suppliers carefully (in person) – the earlier the better
- Watch your exposure – 2nd sources + Exchange rates

BLUECURVE

5) Pragmatism

- Decide early in product development what really matters in the product
- “What is the minimum feature set that will…”
- Adapt where possible, innovate where not

BLUECURVE

Pragmatism

Evolve products to feature up.

Don’t simplify down.

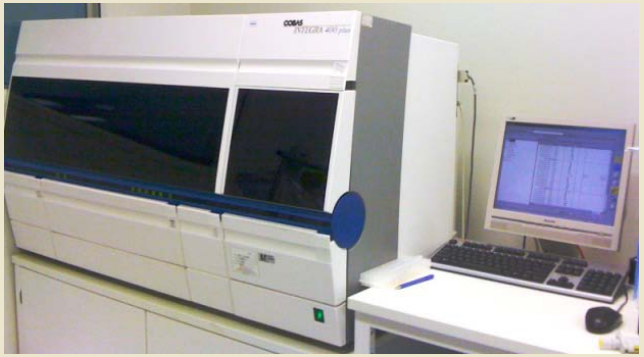

BLUECURVE

6) Creative Commercial Partnerships

- Do what you are good at
- Consider life as an OEM
- Seek powerful relationships – large and small
- Not always large company partners

BLUECURVE

Choose your partners carefully

- Smaller: more innovative, less $$
- Larger: less innovative, more $$
- There are opportunities in both

BLUECURVE

Big vs. small partnerships

BLUECURVE

7) Resources – not just $$$

- $$$ are important – do you have the talent on board to keep bringing them in?

- Just as important
  - Strategic partnerships and relationships
  - IP assets – protect and manage
  - People and culture

BLUECURVE

People and Culture

- “Hire Well”
  - It’s your engine room
  - Be choosy, don’t settle for “near enough”
  - Spend good money on good people

- Manage your culture as well as your bottom line – what sort of company do you want to be?

BLUECURVE

Summary

- To build a successful POCT product and company takes the combination of a huge number of factors.
- Requires the combination of innovation, expertise, technology and partners to form a cohesive whole.
- Success is possible!!

BLUECURVE

BLUE CURVE Pty. Ltd.

info@bluecurve.com.au

M: 0407 093 364

www.bluecurve.com.au

BLUECURVE

THANKYOU

BLUECURVE